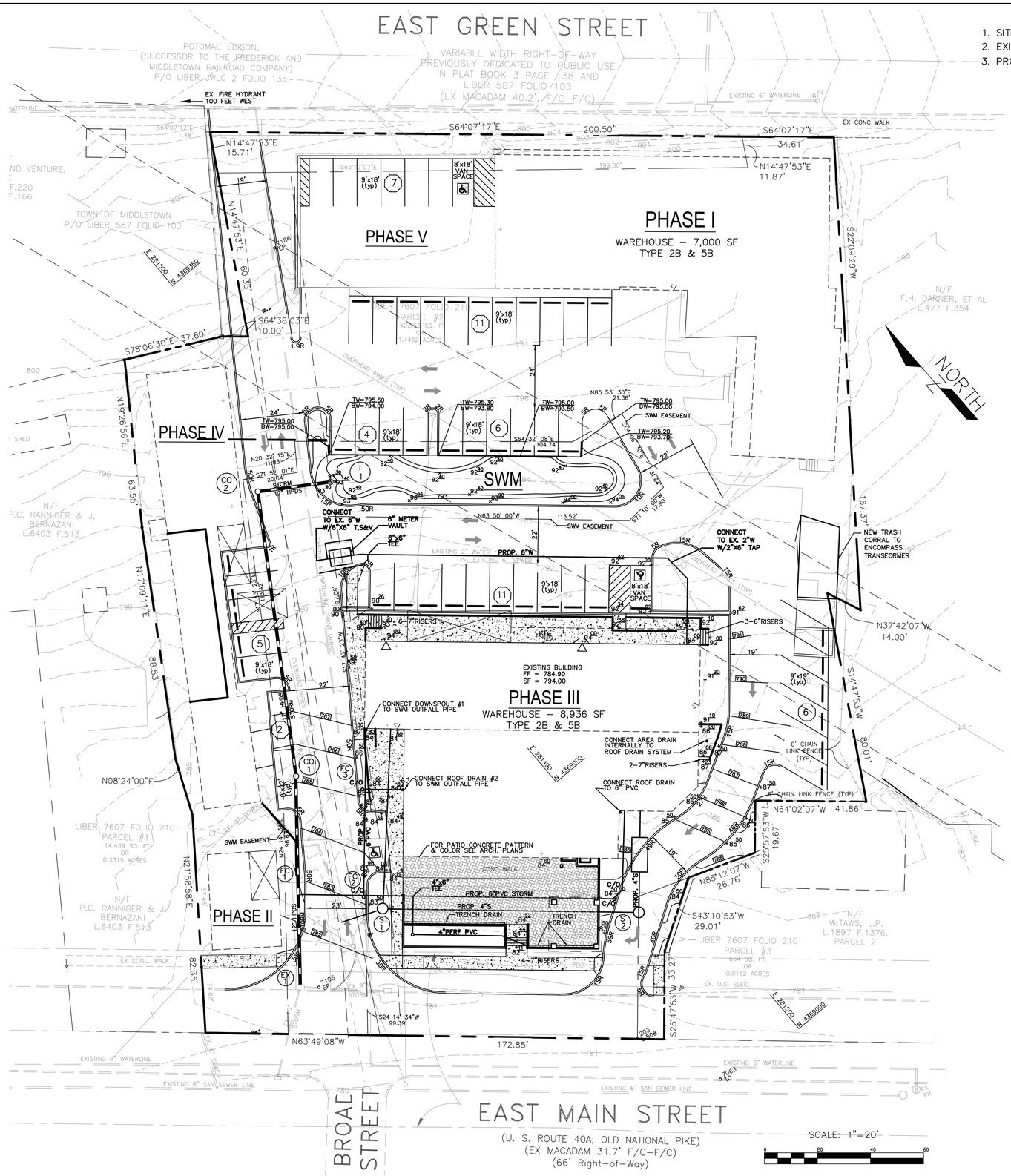

SITE ANALYSIS

1. SITE AREA: 1.839 Acres or 80,107 sf
2. EXISTING USE: Warehouse = 7,000 sf & Hardware Store 4,194 sf
3. PROPOSED USE: Phase I – Warehouse = 7,000 sf
   Phase III – Restaurant/Market Cust. area = 4,194 sf
   Phase IV – Vacant
   Phase V – Vacant

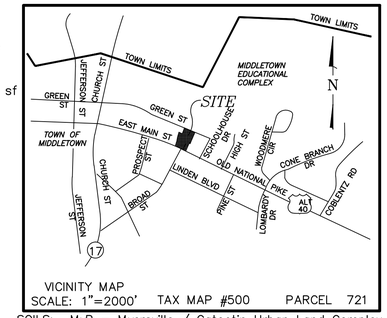

VICINITY MAP
SCALE: 1"=2000' TAX MAP #500 PARCEL 721

SOILS: MyB – Myersville / Catoctin Urban Land Complex (B/C) 3% to 8% Slopes

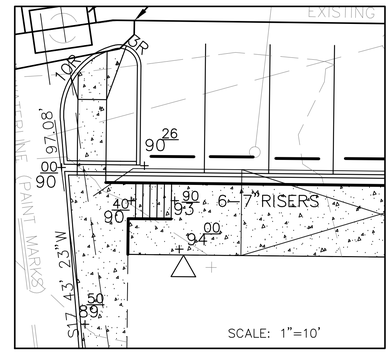

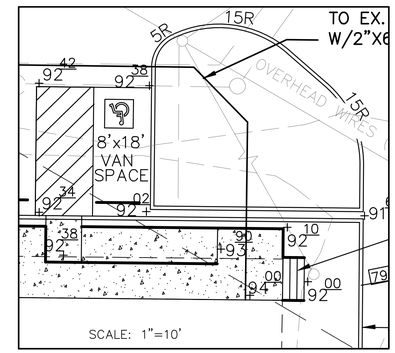

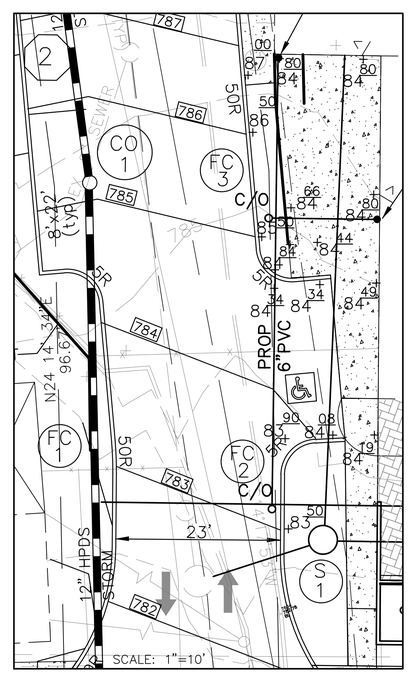

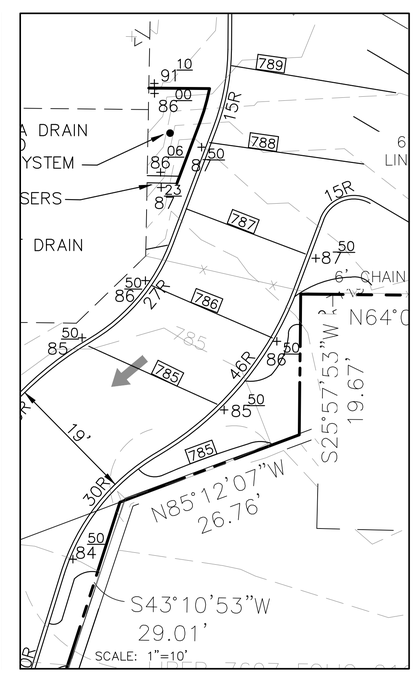

Professional Certification

I hereby certify that these documents were prepared or approved by me, and that I am a duly licensed professional engineer under the laws of the State of Maryland.

Licence No.: 22538
Expiration Date.: 11-24-15

OWNER/APPLICANT

MILLER COMMERCIAL PROPERTIES LLC.
8600 MYERSVILLE ROAD
MIDDLETOWN, MD. 21769
Attn: ANN MILLER
(P) (703) 902-9537

TOWN OF MIDDLETOWN PLANNING COMMISSION

APPROVED: _____
PLANNING COMMISSION CHAIR DATE

ARCHITECT
SETH HARRY & ASSOCIATES, INC.
605 MORGAN STATION ROAD
WOODBINE MARYLAND 21797
TEL 410 489 4725 FAX 410 489 7554
www.sethharry.com
& PROGRESSIVE AE

CIVIL ENGINEER
CMS ASSOCIATES LLC
4925 Ellis Lane
Ellicott City, Maryland 21043
Tel. (410) 988-2436
Contact: Geoffrey L. Ciniero, PE
www.cms-engineering.net

REV. NO.	DATE	REVISIONS PRIOR TO APPROVAL

MILLER COMMERCIAL PROPERTY
SITE PLAN
121 & 203 EAST MAIN STREET
TAX ID: 03-136094 & 03-136108
TOWN OF MIDDLETOWN
MIDDLETOWN ELECTION DISTRICT 3
FREDERICK COUNTY, MARYLAND

PLAN NO.: C-1
SCALE: AS NOTED
DATE: 03/19/2014
SHEET 1 OF 1
FILE NO: 13-005