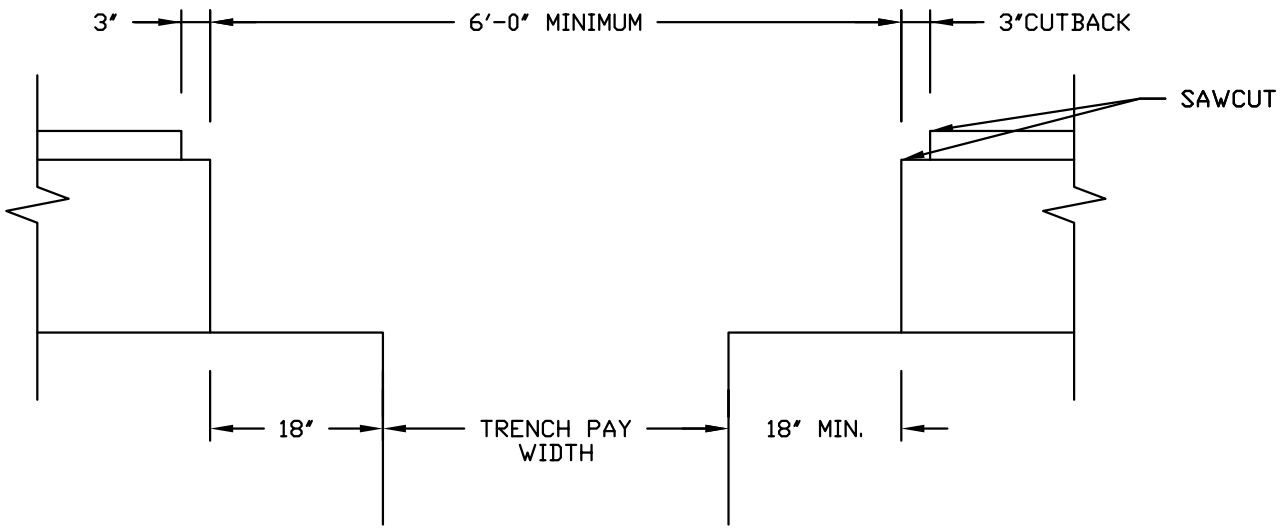

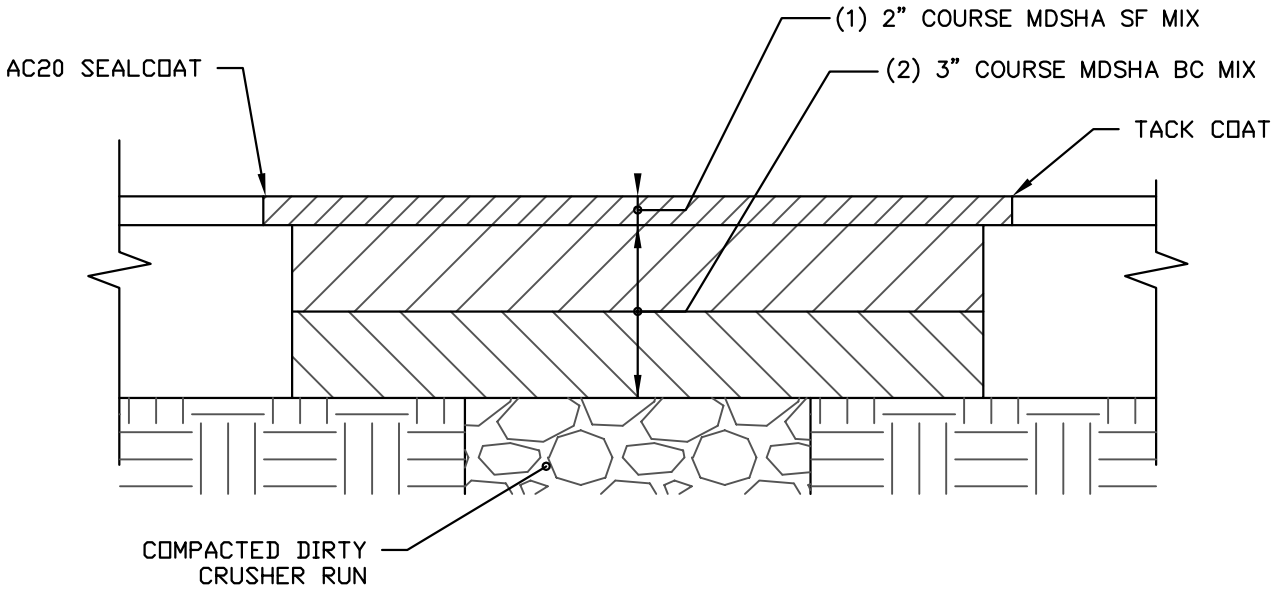

BITUMINOUS ROADWAY

TOWN OF MIDDLETOWN APPROVED: 11/7/00 DATE	STANDARD DETAIL CUTTING & REPAIR IN TOWN STREETS	REVISIONS:	W-3